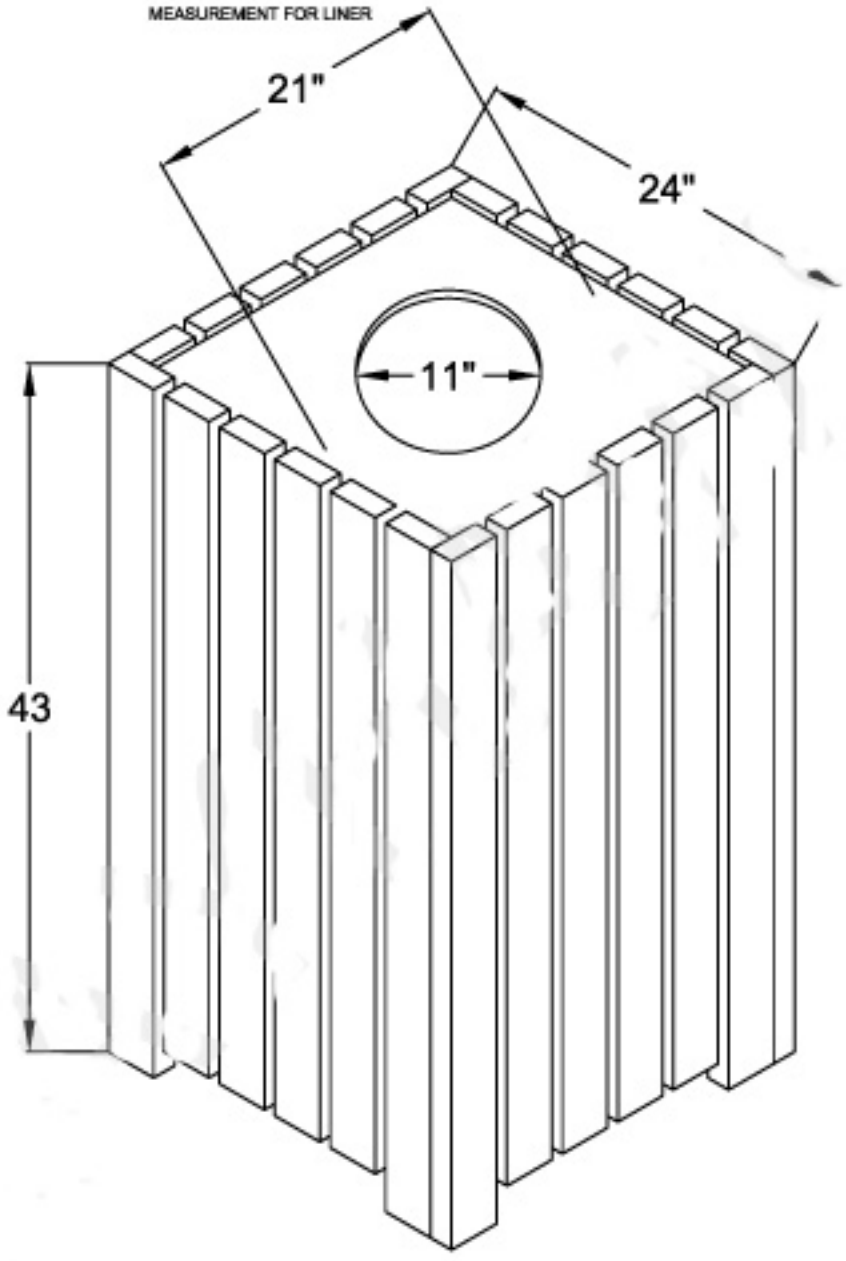

"The most durable receptacle on the market"

- MADE WITH TWENTY-FOUR 2"X 4" RECYCLED PLASTIC SLATS.
- RECYCLED PLASTIC STRUCTURE
- LINER NOT INCLUDED
- UNIT WEIGHT APPROX. 190 LBS.